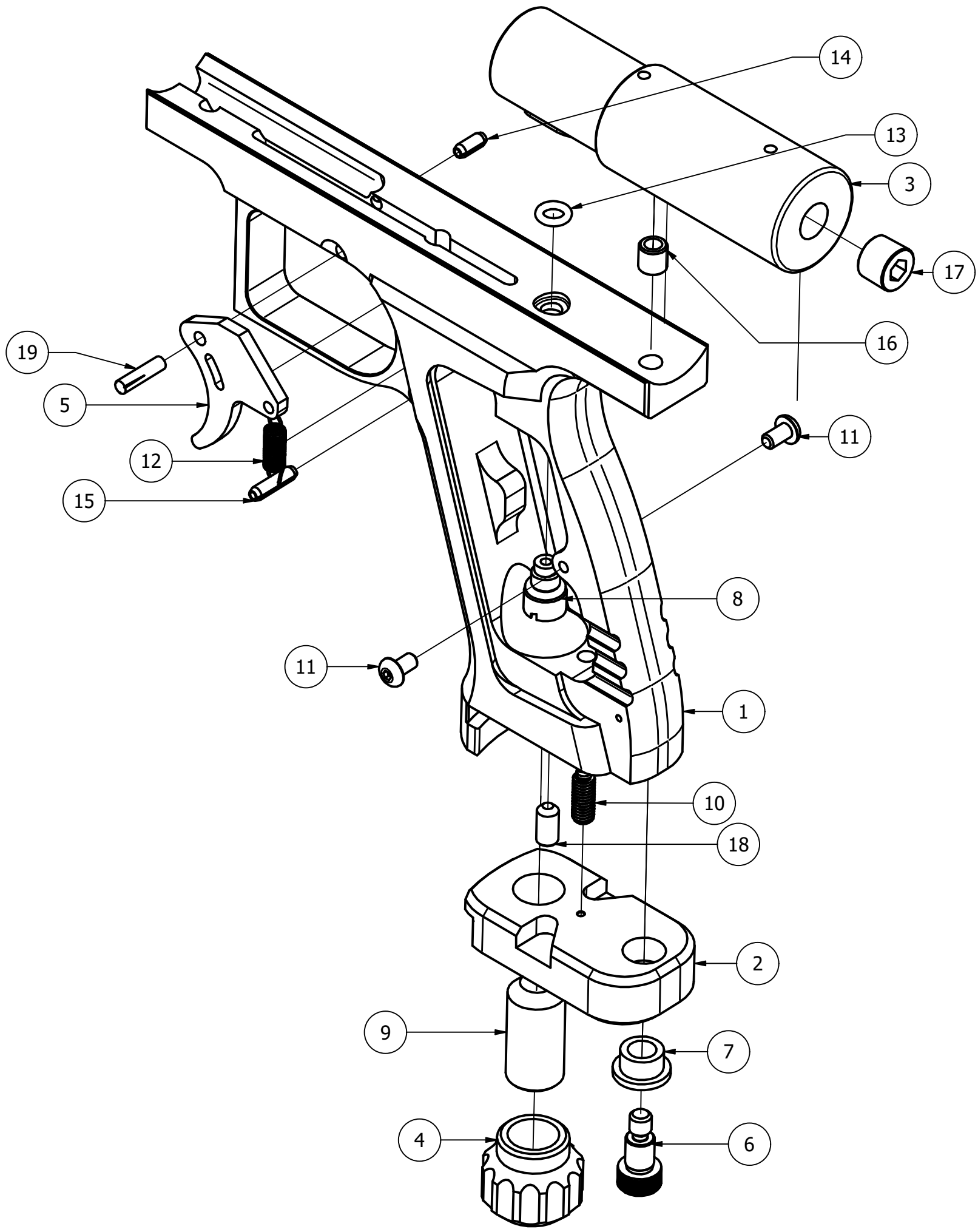

PARTS LIST		
ITEM	QTY	DESCRIPTION
1	1	Phrame 75 Frame
2	1	Phrame Bottom Latch
3	1	Gas Boss Valve Body
4	1	Gas Knob
5	1	Phrame Trigger
6	1	Shoulder Screw 1/4" Dia x 5/16" L, 10-32 Threads, 18-8 SS
7	1	Flanged Bushing, Bronze, 1/4" ID x 1/4" Long
8	1	CCI 12g Pierce Pin Cup
9	1	1/2-20 x 1" Set Screw - Cup Point
10	1	Spring Plunger 10-32
11	2	Hexagon Socket Button Head Cap Screw
12	1	Trigger Spring - Phrame
13	1	O-Ring Dash 008 Urethane
14	1	Pin - Slotted Spring 1/8" x 5/16"
15	1	Pin - Slotted Spring 1/8" x 1/2"
16	1	Phantom Valve Thread Insert 10-32
17	1	1/8" NPT Hex Socket Plug
18	1	10-32 x 3/8" Socket Set Screw SS
19	1	1/8" x 1/2" Quarter Pin